DIAGRAM OF TWINNY

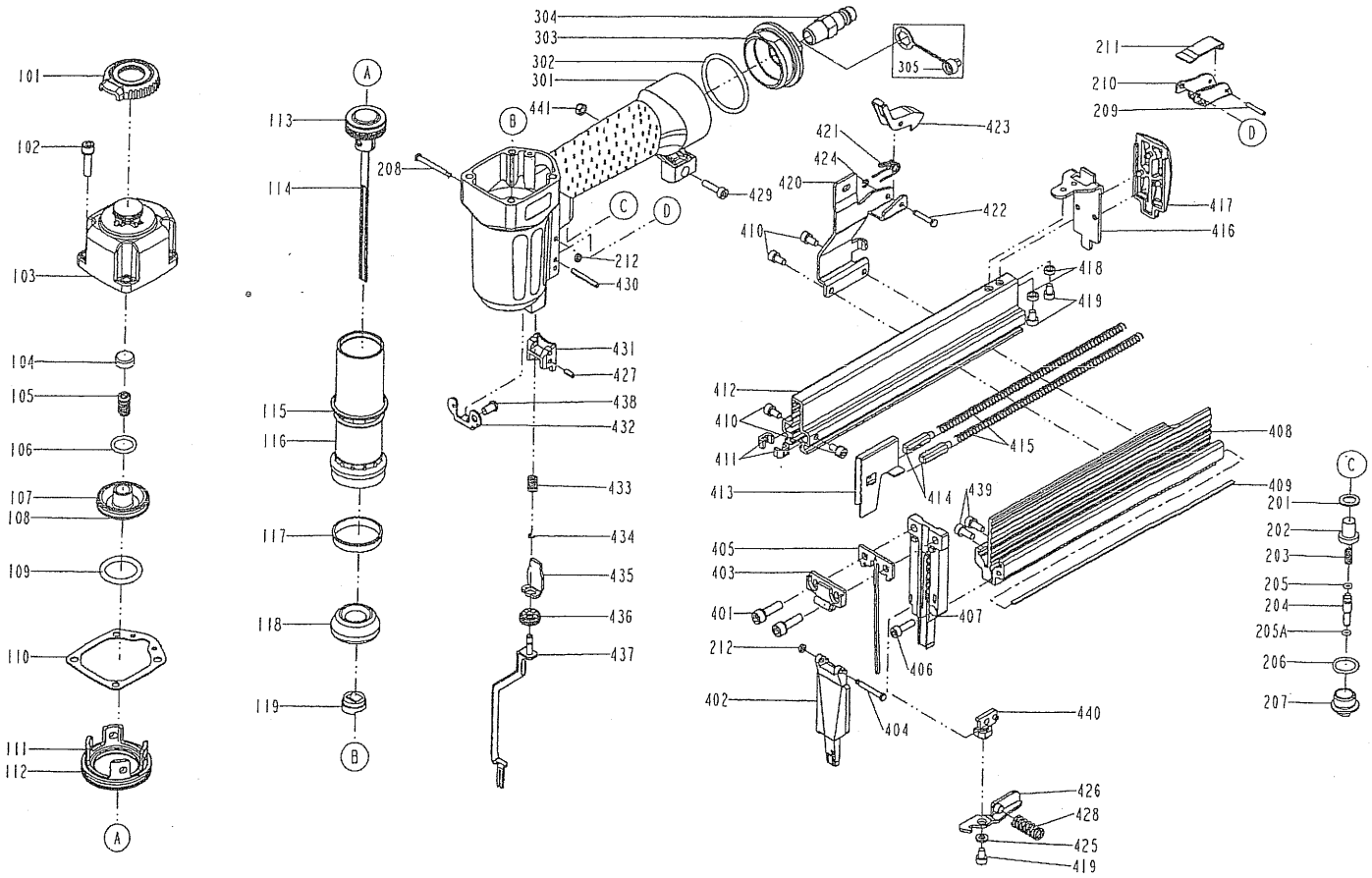

ITEM NO.	PART NO.	DESCRIPTION	ITEM NO.	PART NO.	DESCRIPTION	ITEM NO.	PART NO.	DESCRIPTION
101	11371-0394701-3	DEFLECTOR	302	2041109-04060-0	O - RING	430	2040400-05130-0	SPRING PIN
102	2040100-03030-0	BOLT ASSY	303	11346-0014706-1	END CAP	431	11338-0804701-1	SAFETY GUIDE
103	11369-039C102-1	CAP	304	1135V-0000003-1	AIR PLUG	432	11305-0804702-1	STOPPER
104	11370-0010003-1	SEAL	305	1132L-0014701-1	DUSTY COVER	433	11319-0014701-1	SPRING
105	11360-0010001-3	COMPRESSION SPRING	401	2040100-03030-2	BOLT ASSY	434	1131C-0664701-1	RING
106	2041100-02020-0	O - RING	402	11352-0804701-2	DRIVER GUIDE COVER A	435	11332-0804701-1	SAFETY B
107	11368-0010006-1	HD.VALVE PISTON	403	11353-0804701-1	DRIVER GUIDE COVER B	436	11393-0804701-1	ADJUST AXIE
108	2041108-04010-0	O - RING	404	11324-0264701-1	FIXED PIN	437	11331-0804701-1	SAFETY A
109	2041108-03120-0	O - RING	405	1134K-0804701-1	SPRING	438	2040102-03070-0	HALF ROUND HD.HEX.BOLT
110	1132M-0010001-2	PACKING	406	2040101-02070-0	HEX.SOC.HD.BOLT	439	2040100-02050-0	BOLT ASSY
111	11399-0010002-1	COLLAR	407	11303-0804701-2	DRIVER GUIDE	440	1131F-0804701-1	ANCHOR BLOCK
112	2041109-05020-0	O - RING	408	11389-0804701-1	MAGAZINE A	441	2040500-02010-0	LOCK NUT
113	2041108-03010-0	O - RING	409	11377-0014701-1	FLAT BAR			
114	11204-0800002-2	DRIVER UNIT	410	2040100-02040-0	BOLT ASSY			
115	2041104-03010-0	O - RING	411	1133K-0024701-1	STOPPER			
116	11320-0680001-2	CYLINDER	412	11391-0804701-1	MAGAZINE B			
117	11322-0010001-1	CYLINDER RING	413	11363-0804701-1	PUSHER			
118	11327-0390001-1	BUMPER	414	11378-0741101-1	SHAFT			
119	11301-0010001-2	JOINT GUIDE	415	11367-0020001-1	PUSHER SPRING			
201	1133R-0010001-1	SEAL	416	11347-0804701-1	REAR PLATE			
202	11373-0010002-2	TRIGGER VALVE HEAD	417	11390-0804701-1	PROTECTING HOOD COVER			
203	1133U-0014701-1	SPRING	418	11381-0024701-1	WASHER			
204	11375-0014702-1	TRIGGER VALVE STEM	419	2040101-02020-0	HEX.SOC.HD.BOLT			
205	2041102-01030-0	O - RING	420	11323-0804701-1	BRACKET			
205A	2041102-01031-0	O - RING	421	11315-0154701-1	SPRING			
206	2041105-02010-0	O - RING	422	11344-0024701-1	LATCH PIN			
207	11374-0014702-1	TRIGGER VALVE GUIDE	423	11343-0154701-1	LATCH			
208	11318-0464701-1	TRIGGER PIVOT PIN	424	2040302-22010-0	E - RING			
209	2040400-04080-0	SPRING PIN	425	2040202-02010-0	FLAT WASHER			
210	11316-0684701-1	TRIGGER	426	1135Y-0804701-1	LATCH			
211	1131S-0014701-1	SAFETY	427	2040400-05040-0	SPRING PIN			
212	1131D-0460001-1	URETHANE RETAINER	428	11313-0394701-1	LOCK.SPRING			
301	11230-0018401-1	GUN BODY UNIT	429	2040101-02080-0	HEX.SOC.HD.BOLT			